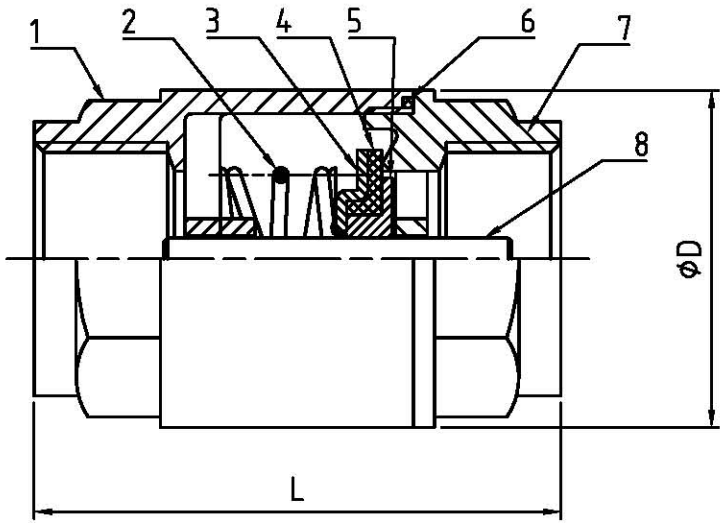

NO.	PART NAME	MATERIAL	Q'TY
8	STEM	304/316	1
7	CAP	CF8/CF8M	1
6	GASKET	PTFE	1
5	CORE	304/316	1
4	SEAT	RUBBER	1
3	DISC	304	1
2	SPRING	304	1
1	BODY	CF8/CF8M	1

SIZE	1/4	3/8	1/2	3/4	1	11/4	11/2	2
L	51	51	57	62	75	82	88	100
D	29	29	32.5	40.5	48	60	70	87

NTC Barrel Spring Check valve

NTC-SPV20